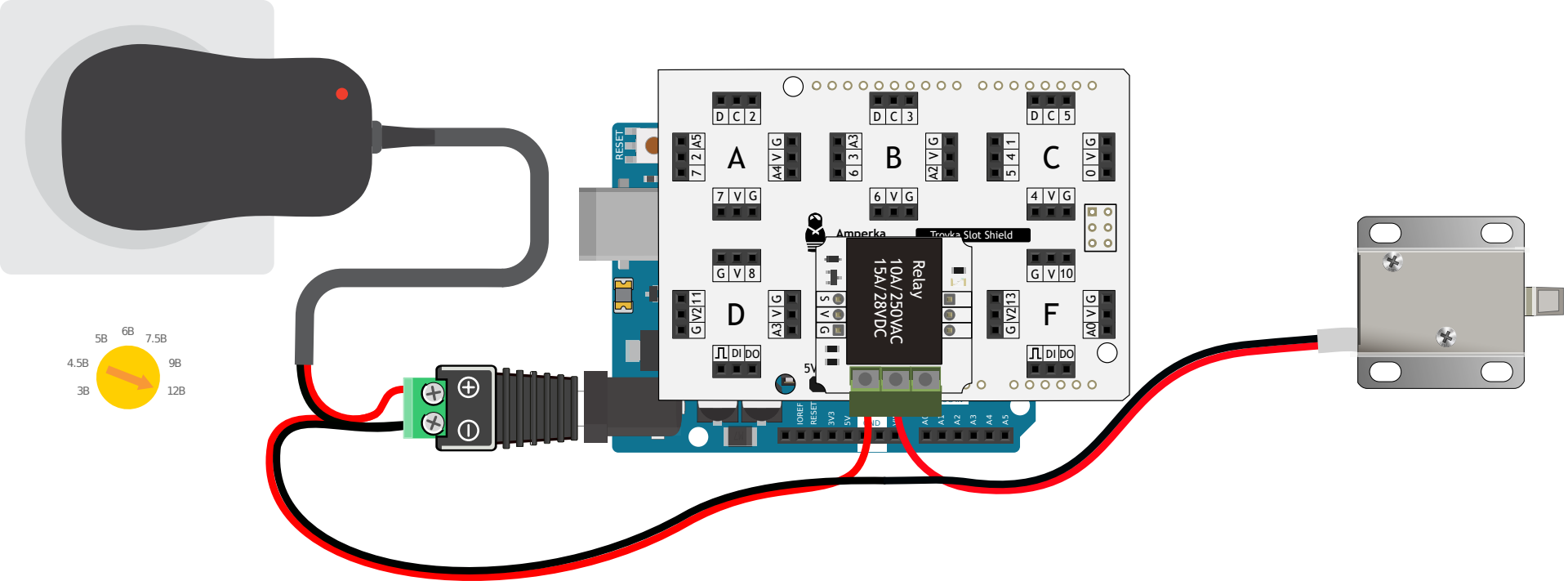

6B
5B
7.5B
4.5B
9B
3B
12B
RESET
A
B
C
D
F
Amperka
Troyka Slot Shield
Relay
10A/250VAC
15A/28VDC
5V
IOREF
RESET
3V3
5V
A0
A1
A2
A3
A4
A5